Vulcan

vulcanlighting.co.za

Helios
Hybrid

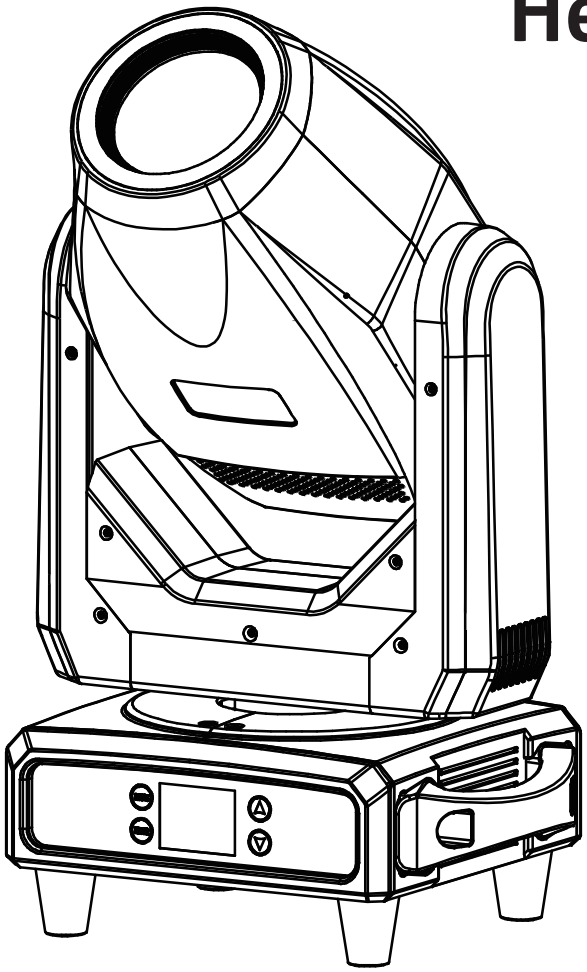

USER MANUAL

Please read the instructions carefully before use

directory

1. Safety guidance ----------1

2. Technical Specifications----------3

3. control panel ----------5

4. Lighting installation----------6

5. Fixture settings ----------7

5.1 Key features----------7

5.2 Initial position adjustment----------15

6. Universal DMX controller control----------18

6.1 DMX512 connection----------18

6.2 Address code settings----------20

6.3 DMX512 channel----------20

6.4 Product Lighting Diagram ----------28

7. error message----------28

8. Troubleshooting----------31

9. Equipment cleaning----------32

1. Safety guidance

Please read this manual carefully, it includes important information such as installation, use, and maintenance.

Warnings

Please keep this manual as a basis for future inquiries, and if you sell this product to other users, please make sure they also get this manual.

Note：

When the equipment leaves the factory, it is packaged in good condition, please operate in accordance with the user manual, and the machine failure caused by human reasons is not guaranteedScope of repair.

. Before using the product, please open it and inspect it carefully to ensure that the lamp is not damaged by transportation.

. The device is only suitable for use in a dry room indoors.

. The installation and operation of the lamps and lanterns should be carried out by professionals.

. Do not allow small children to operate the machine.

. Use a secure rope to secure the fixture, and hold up the bottom while moving the fixture.

. The device must be installed in a well-ventilated place, at least 50 cm away from the adjacent plane.

. Make sure the ventilation holes are clear to avoid overheating while the fixture is running.

. Ensure that the supply voltage matches the supply voltage required by the equipment before operation.

. Please ground the conductor to prevent electric shock.

. Do not operate the lamp below 0°C or above 40°C.

. It is forbidden to connect the luminaire directly to the dimming device.

. A small amount of smoke or odor may occur when the new fixture is operating, which will disappear after 15 minutes of operation.

. Do not place combustible materials next to the lamp when it is running, for fire risk.

. Before turning on the lamp, please carefully check whether the power cord is broken, and replace it immediately if it is damaged.

. The luminaire can operate at a surface temperature of up to 75°C, do not touch it with bare hands.

. Avoid flammable liquids, water or metal and other electrical conductors from entering the inside of the lamp to avoid electric shock or fire, if there is any foreign object entering the lamp, please cut off the power immediately.
. Avoid operating the lamps in dirty and dusty environments, and clean and maintain the lamps regularly.
. It is forbidden to touch the wires when the lamp is running to prevent electric shock.
. Avoid entanglement of the power cord with other wires.
. The Distance Between The Luminaire and The Illuminated Surface Should BE Greater Than 0.5M
. Before replacing the fuse or bulb, disconnect the power supply.
. Use the same model when replacing a fuse or bulb.
. Do not turn the light on repeatedly.
. If there is obvious damage to the lamp housing, lens or UV filter, please replace it in time.
. There are no usable parts inside the lamp, so please do not open the lamp housing without permission.
. If the machine fails, please stop using it immediately, and check it by power-off; Non-professional technicians, please do not repair by yourself; For assistance, please contact the nearest authorized sales/technical center.
. When the lamp is not used for a long time or is repaired, please cut off the power supply.
. When you need to transport it again, please use the original packaging materials.
. There is a risk of explosion of high-temperature bulbs, do not turn on the light fixture within 15 minutes of power off.
. Replace the bulb in time if it is damaged, deformed by heat, or has exceeded its service life.
. Please do not look directly at the lamp when it is running.
. The bulb will be hot when the fixture is running, do not touch the bulb with your bare hands.
. Do not operate the lamp if it does not have a protective cover or if the housing is damaged.

note：

There are no parts inside the luminaire that can be used by the user. Don't just open the case, and don't repair it yourself.

In the unlikely event that your fixture needs to be repaired, please contact your nearest dealer.

Installation：

The luminaire should be screwed to the quick-lock hook and be sure to be securely installed to prevent it from fluttering and slipping off during operation.Also make sure that the structure of the connected luminaire is able to support 10 times the weight of the luminaire. It should be used at the same time as the installation of the luminaire A safety rope capable of supporting up to 12 times the weight of the luminaire.

The installation of the equipment should be carried out by professionals, and it should also be installed in a place that people cannot touch or pass by.

2. Technical Specifications

Input voltage range:

110-240V~ 50/60Hz

Power consumption:

350W

Light Source:

250W LED Engine & 36pcsx0.5W RGB SMD LEDs

Color Temperature Output:

7000K

Beam Angle:

7°-35°

Movement:

Pan movement: 540°

Tilt movement: 270°

Moving-head operated with either 16-bit resolution

Automatic Pan/Tilt position correction

Dimming/Strobe:

0%~100% variable dimming, multi-speed strobe effect

Color:

1 x Color Wheel: 7 colors with 1 CTB Filter, plus open

Gobo:

1 x Static Gobo Wheel: 1 static gobo wheel with 9 gobos plus open

1 x Rotating & Interchangable Gobo Wheel: 1 rotating

Prism:

1 x Combinable Rotating and Indexable Prisms: one 4-facet prism

Movement:

Control channels: 17,21

Protocols: DMX512, Automatic, Sound active, RDM, Art-Net

Firmware Upgrade: Upgrade via DMX Iink or USB disk

structure:

Display: LCD display

Data In/Out: 3-pin or 5-pin XLR

Power In/Out: Power Connector in/out

Ingress protection: IP20

Key features:

Motorized focusing system

4 prisms, rotatable

Superior color macros

Independent atomization effect

It integrates beam, pattern, and dyeing functions

2 fixed folding hooks for 50mm truss with keyhole reserved for 70mm truss for removable hooks

Dimensions/Weight:

Product Size: 330x243x566mm

Package Size: 430x332x660mm, 16.2kgs

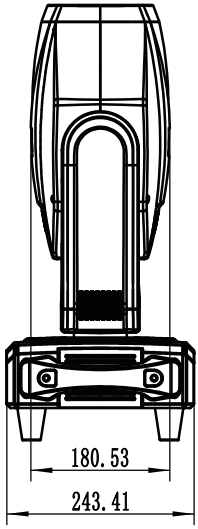

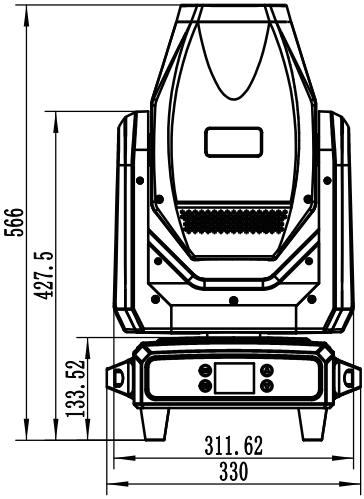

3.control panel

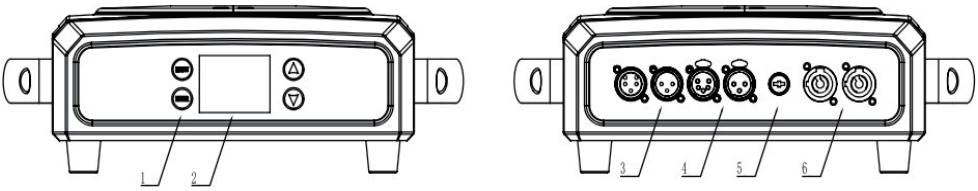

1. Display: Displays various function menus

2. Buttons:

MENU	Go to the menu to select the function
UP	to the previous option
▼ DOWN	to the latter option
ENTER	Confirm the selected feature

3. USB socket: used to update the firmware version of the device

4. Power display

5. DMX Input:

For DMX512 connection, use a 3/5 core XLR signal cable to connect the luminaire to the DMX console and input DMX Signal

6. DMX Output:

For DMX512 connection, use a 3/5-pin XLR signal cable to connect to the next fixture and output a DMX signal

7. Power Input: Connect the power supply to provide power

8. Fuse (T 10A): Protects the luminaire from damage caused by excessive current or short circuit

9. Power Switch: Turn on/off the power

10. Power input (POWERCON 1-in, 1-out version): connect to the power supply

11. Power output (POWERCON 1-in, 1-out version): Connect the next lamp

4.Lighting installation

The installation of the equipment should be carried out by a professional and should also be installed in an area other than a walking path, seating area, or away from an area where the luminaire may be touched by unauthorized persons. When assembling, disassembling or repairing a luminaire, never stand directly underneath the luminaire.

When installing the fixture, make sure that the fixture is installed securely to prevent it from shaking and slipping off while running. Also make sure to fix the fixtures The structure is able to support 10 times the weight of the luminaire without deformation. When installing the luminaire, use a strip that can be supportedSafety rope with 12 times the weight of the fixture to ensure that the fixture does not fall out if the fixture fails.This luminaire is fully operable in 3 different mounting positions: suspended upside down, mounted transversely on a truss, or placedOn a flat horizontal plane. Always use and install the included safety rope as a safety measure to prevent the light fixture from getting caught in the clip Accidental damage or casualty in the event of a malfunction.

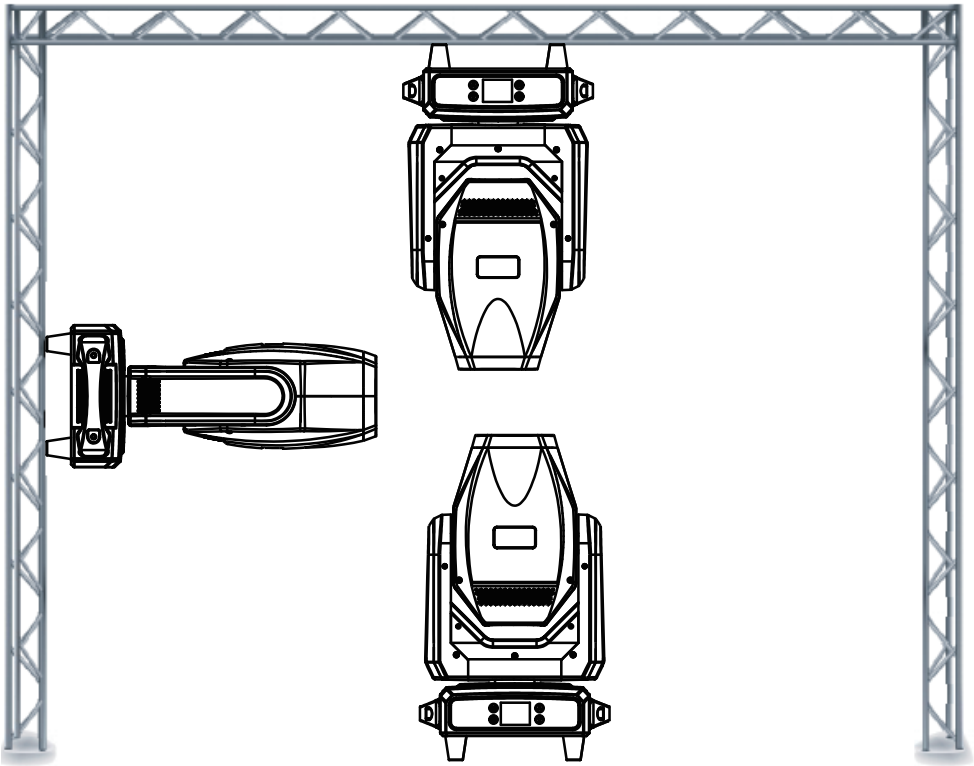

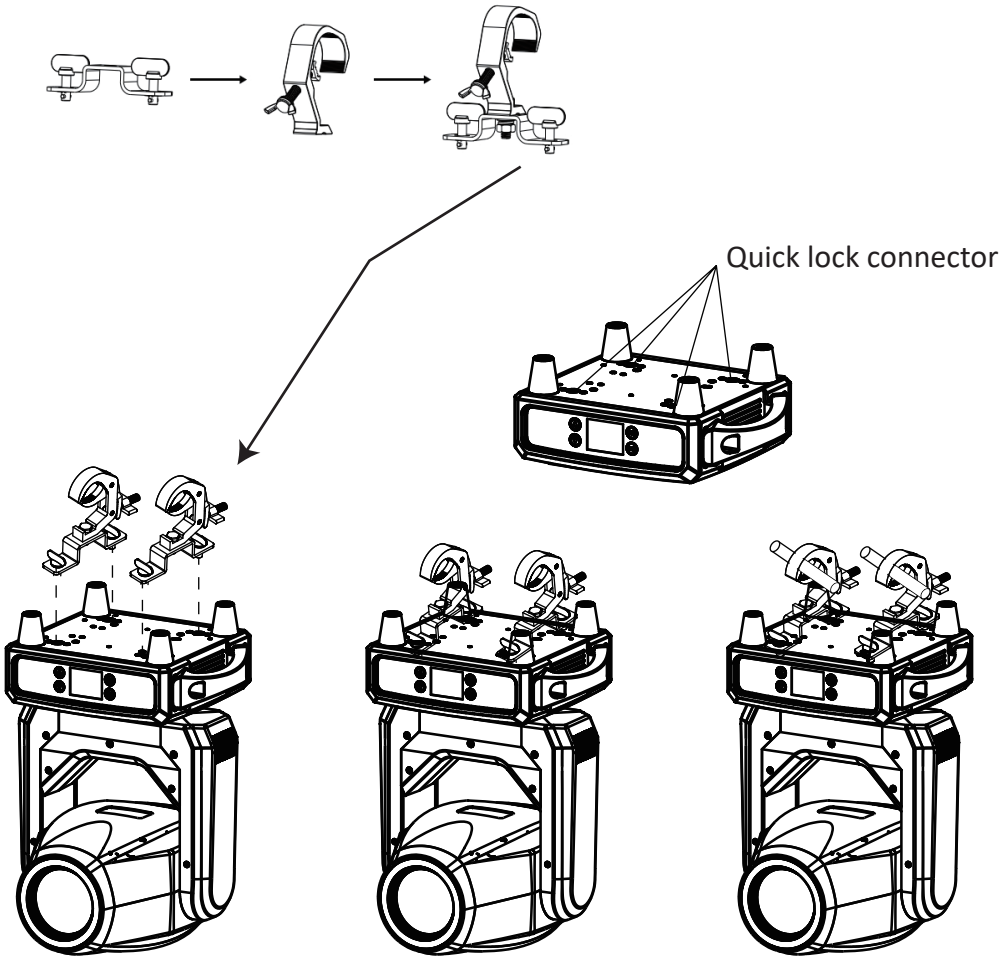

5. Fixture settings

5.1 Key features

Turn on the machine, press the **MENU** button to enter the menu mode, use the **UP/DOWN** button to find the menu when pre When the menu is displayed on the display screen, press the **ENTER** button to confirm, and use the **UP/DOWN** button to select the sub-menu Single, press the **ENTER** button to save the settings or automatically return to the previous menu. Press the **MENU** button to return, or wait 30 seconds before automatically exiting menu mode. The main functions are shown below:

MAIN MENU	SUBMENU	OPTIONS	
DMX Functions	DMX Address	001	
		512	
	DMX Channel	Mode1（17）	
		Mode2（21）	
	DMX State	M/S	
		Hold	
		BlackOut	
	View Dmx Value	Pan	000-255
		Pan Fine	000-255
		Tilt	000-255
		Tilt Fine	000-255
		P/T Speed	000-255
		Special Function	000-255
		Shutter	000-255
		Dimmer	000-255
		Color	000-255
		Gobo1	000-255
		RGobo1	000-255
		Gobo2	*000-255*
		Prism	000-255
		RPrism	000-255
		Focus	000-255
		Focus Fine	000-255
		Zoom	000-255
		Zoom Fine	000-255
		ArLed Dimmer	000-255
		ArLed Macro	000-255
		ArLed Macro Sp	000-255
Show Settings	Show Chase	show1	
		show2	
		show3	
		show4	
	Show Focus	5m	
		10m	
		15m	
	Slave Mode	Slave1	
		Slave2	

	Sound Trigger	Off
		On
	Sound Sense	000-100
Fixture Settings	Pan Inverse	No
		Yes
	Tilt Inverse	No
		Yes
	P/T Feedback	No
		Yes
	Dimmer Curve	Liner
		Square
		Inv SQ
		S Curve
	Dimmer Speed	Fast
		Smooth
	Focus Compensate	Disable
		Near
		Middle
		Far
Display Settings	Display Inverse	No
		Yes
		Auto
	Backlight Switch	Off
		On
	Backlight Intensity	0-10
	Temperature Unit	°F
		°C
	Language	English
		Chinese
Fixture Test	Auto Test	
	Manual Test	
Fixture Information	Fixture use time	
	Firmware Version	
Reset	Pan/Tilt	No
		Yes
	Effect	No
		Yes

	All	No
		Yes
Special Function	Factory Setting	
	Password	

DMX Functions

Enter the **MENU** mode, select the **DMX Function**, press the **ENTER** button to confirm, and use the **UP/DOWN** button to select: **DMX Address**, **DMX Channel**, **DMX State** or **View Dmx Value**.

DMX Address

Select the **DMX Address**, press the **ENTER** button to confirm, and the current **DMX Address** will be displayed on the display. Use the **UP/DOWN** button to select the 1**-512** address and press the **ENTER** button to save. Press the **MENU** button to return to the previous menu or wait for 30 seconds to automatically exit the menu mode.

DMX Channel

Select the **DMX Channel**, press the **ENTER** button to confirm, the current **DMX Channel** will be displayed on the display, use the **UP/DOWN** button to select: **Mode 1 (17)** or **Mode 2 (21)**, press the **ENTER** button to save. Press the **MENU** button to return to the previous menu or wait 30 seconds to automatically exit menu mode.

DMX State

Select the **DMX State**, press the **ENTER** button to confirm, the current mode will be displayed on the display, use the **UP/DOWN** button to select: **Standby** (the machine will enter standby mode when the DMX signal stops) or **Hold** (the machine will remain in the last state when the DMX signal stops), press the **ENTER** button to save. Press the **MENU** button to go back on Level 1 menu or wait 30 seconds to automatically exit menu mode.

View Dmx Value

Select **View Dmx Value**, press the **ENTER** button to confirm, the current channel and its value will be displayed on the screen. Use the **UP/DOWN** button to view additional channel values. Press the **MENU** button to return to the previous menu or wait 30 seconds to automatically exit menu mode.

Show Settings

Enter the **MENU** mode, select **Show Settings**, press the **ENTER** button to confirm, and use the **UP/DOWN** buttons to select: **Show Chase**, **Show Focus**, **Slave Mode**, **Sound Trigger** or **Sound Sense**.

Show Chase

Select the **Show Chase**, press the **ENTER** button to confirm, the current mode will be displayed on the display, use the **UP/DOWN** button to select: **show1**, **show2**, **show3** or **show4**, press the **ENTER** button to save Exist. Press the **MENU** button to return to the previous menu or wait for 30 seconds to automatically exit the menu mode.

Show Focus

Select **Show Focus**, press the **ENTER** button to confirm, the current mode will be displayed on the display light, select via the **UP/DOWN** button: **5m**, **10m** or **15m**, press the **ENTER** button to save, press the **MENU** button to return to the previous menu or wait for 30 seconds to automatically exit the menu mode.

Slave Mode

Select the **Slave Mode**, press the **ENTER** button to confirm, the current mode will be displayed on the display light, select through the **UP/DOWN** button: ***Slave1*** or **Slave2**, press the **ENTER** button to save, press the **MENU** button to return to the previous menu or wait for 30 seconds to automatically exit the menu mode.

Sound Trigger

Select **Sound Trigger**, press the **ENTER** button to confirm, the current mode will be displayed on the display light, select via the **UP/DOWN** button: **Off** or **On**, press the **ENTER** button to save, press the **MENU** button to go back Previous menu or wait 30 seconds to automatically exit menu mode.

Sound Sense

Select **Sound Sense**, press the **ENTER** button to confirm, the current mode will be displayed on the display light, select **000** or **100** via the **UP/DOWN** button, press the **ENTER** button to save, press the **MENU** button to go back Go to the previous menu or wait 30 seconds to automatically exit the menu mode.

Fixture Settings

Enter the **MENU** mode, select Machine Settings, press the **ENTER** button to confirm, use the **UP/DOWN** button to select: **Pan Inverse**, **Tilt Inverse**, **P/T Feedback**, **Dimmer Curve**, **Dimmer Speed**, **Focus Compensate**.

Pan Inverse

Select **Pan Inverse**, press the **ENTER** button to confirm, the current mode will be displayed on the display, use the **UP/DOWN** button to select: **No** (normal operation) or **Yes** (horizontal negation), press the **ENTER** button to save. Press the **MENU** button to return to the previous menu or wait 30 seconds to automatically exit menu mode.

Tilt Inverse

Select **Tilt Inverse**, press the **ENTER** button to confirm, the current mode will be displayed on the display, use the **UP/DOWN** button to select: **No** (normal operation) or **Yes** (vertical negation), press the **ENTER** button to save. Press the **MENU** button to return to the previous menu or wait 30 seconds to automatically exit menu mode.

P/T Feedback

Select **P/T Feedback**, press the **ENTER** button to confirm, the current mode will be displayed on the display, use the **UP/DOWN** button to select: **No** (X/Y will remain out of step when it is out of step) or **Yes** (it will be self when X/Y is out of step PRESS **ENTER** TO SAVE. Press the **MENU** button to return to the previous menu or wait 30 seconds to automatically exit menu mode.

Dimmer Curve

Select **Dimmer Curve**, press the **ENTER** button to confirm, the current mode will be displayed on the display, use the **UP/DOWN** button to select: **Linear**, **Squared**, **Inverse Squared** or **S-Curve**, press the **ENTER** button to hold Exist. Press the **MENU** button to return to the previous menu or wait 30 seconds to automatically exit menu mode.

Please refer to the following figure for the details of the curve:

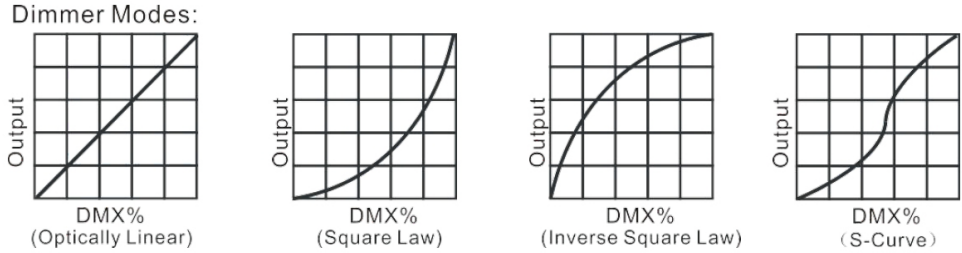

Dimmer Speed
Select the **Dimming speed**, press the **ENTER** button to confirm, the current mode will be displayed on the display, use the **UP/DOWN** button to select: Fast or Smooth, press the **ENTER** button to save. Press the **MENU** button to retreat Go back to the previous menu or wait 30 seconds to automatically exit menu mode.

Focus Compensate
Select **Focus Compensation**, press the **ENTER** button to confirm, the current mode will be displayed on the display, use the **UP/DOWN** button to select: **Disable**, **Near**, **Middle** or **Far**, press the **ENTER** button to save. Press the **MENU** button to return to the previous menu or wait 30 seconds to automatically exit menu mode.

Display Settings
Enter the **MENU** mode, select **Display Settings**, press the **ENTER** button to confirm, and select by **UP/DOWN** button to select: **Display Inverse**, **Backlight Switch** , **Backlight Intensity**, **Temperature Unit** or **Language**.

Display Inverse
Select **Display Inverse**, press the **ENTER** button to confirm, the current mode will be displayed on the display, use the **UP/DOWN** button to select: **No** (Normal), **Yes** (Show Reverse), or Automatic, press the **ENTER** button to save.Press the **MENU** button to return to the previous menu or wait 30 seconds to automatically exit menu mode

Backlight Switch
Select **Backlight Switch**, press the **ENTER** button to confirm, the current mode will be displayed on the display, adjust the backlight by **UP/DOWN** button **OFF** or **ON**, press the **ENTER** button to save. Press the **ENTER** button to keep itExist. Press the **MENU** button to return to the previous menu or wait for 30 seconds to automatically exit the menu mode.

Backlight Intensity
Select **Backlight Intensity**, press the **ENTER** button to confirm, the current mode will be displayed on the display, use the **UP/DOWN** button to adjust the backlight brightness from **001** (black) to **010** (bright), press the **ENTER** button to save. Press the **ENTER** button to save. Press the **MENU** button to return to the previous menu or wait 30 seconds for an automatic exitMenu mode.

Temperature Unit
Select the **Temperature Unit**, press the **ENTER** button to confirm, the current mode will be displayed on the display, use the **UP/DOWN** button to select: **°C** or **°F**, press the **ENTER** button to save. Press the **MENU** button to go back onLevel 1 menu or wait 30 seconds to automatically exit menu mode.

Language
Select the **Language**, press the **ENTER** button to confirm, the current mode will be displayed on the display, use the **UP/DOWN** button to select: **English** or **Chinese**, press the **ENTER** button to save. Press the **MENU** button to return to the previous menu or wait 30 seconds to automatically exit menu mode.

Fixture Test
Enter the **MENU** mode, select **Fixture Test**, press the **ENTER** button to confirm, and use the **UP/DOWN** button to select: **Auto Test** or **Manual Test**.

Auto Test
Select **Auto Test**, press the **ENTER** button to confirm, and the machine will run the built-in program to test horizontal, vertical, color wheel, gobo wheel, pattern rotation, prism disk, prism rotation, dimming, strobe, zoom, focus, fogging Wait. Press the **MENU** button to go back to the previous menu or return to menu mode when the test is over.

Manual Test
Select **Manual Test**, press the **ENTER** button to confirm, and the current channel will be displayed on the display. Use the **UP/DOWN** button to select the channel, press the **ENTER** button to confirm, and then use the **UP/DOWN** button to do so Adjust the channel value, press the **ENTER** button to save, and the machine will run according to the channel value. Press the **MENU** button to return to the previous menu or wait 30 seconds to automatically exit menu mode. (When you exit the manual test menu, all channel values will become zero).

Fixture Information
Enter the **MENU** mode, select **Fixture Information**, press the **ENTER** button to confirm, and use the **UP/DOWN** button to select: **Fixture use time** or **Firmware Version**.

Fixture use time
Select the **Fixture use time**, press the **ENTER** button to confirm, the time when the lamp is running will be displayed on the display, press the **MENU** button to exit.

Firmware Version
Select the **Firmware Version**, press the **ENTER** button to confirm, the **Firmware Version** of the device will be displayed on the display, press **MENU** button to exit.

Reset
Enter the **MENU** mode, select **Reset**, press the **ENTER** button to confirm, and use the **UP/DOWN** button to select: **Pan/Tilt**, **Effect** or **All**.

Pan/Tilt

Select **Pan/Tilt**, press the **ENTER** button to confirm, and use the **UP/DOWN** button to select: **No** or **Yes** (the machine will run the built-in program to restore the initial position both horizontally and vertically). Press the **ENTER** button to save.Press the **MENU** button to exit.

Effect

Select **Effect**, press the **ENTER** button to confirm, Use the **UP/DOWN** button to select: **No** or **Yes** (machine operation will run the built-in program to restore the initial position of the head motor). Press the **ENTER** button to save. press **MENU** button to exit.

All

Select **All** , press the **ENTER** button to confirm, Use the **UP/DOWN** buttons to select: **No** or **Yes** (machine operation will run the built-in program to restore all motor initial positions). Press the **ENTER** button to save. Press the **MENU** button to exit.

Special Function

Enter the **MENU** mode, select Special Functions, press the **ENTER** button to confirm, and select: **Factory Setting** or **Password**.

Factory Setting

Select **Factory Setting**, press the **ENTER** button to confirm, use the **UP/DOWN** buttons to select: **No** (keep current settings) or **Yes** (restore factory settings), and once selected, press **ENTER** to save. Press the **MENU** button to exit.

Password

Select **Password**, press the **ENTER** button to confirm, use the **UP/DOWN** button to select: **000** or **999**, and once selected, press the **ENTER** button to save. Press the **MENU** button to exit.

5.2 Initial position adjustment

Press the **MENU** button to enter the menu mode, then press the **ENTER** button for about 3 seconds to enter the initial setup menu to adjust the initial position of each motor, press the **ENTER** button to confirm. Use the **UP/DOWN** button to select a submenu, and press the **ENTER** button to save and automatically return to the previous menu. Press the **MENU** button to exit.

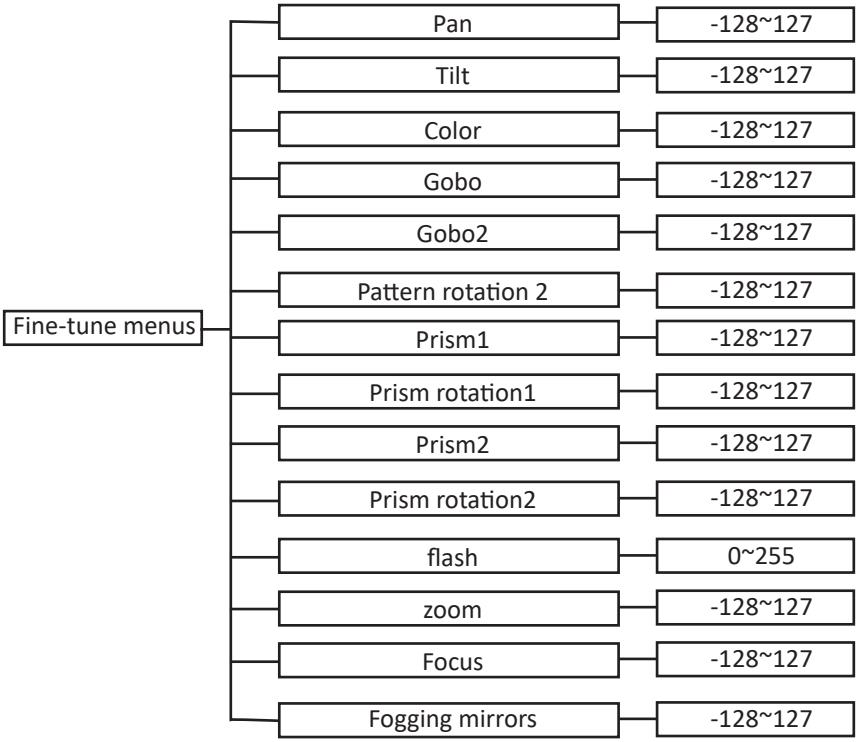

Pan

Enter the initial setup menu, select **Pan**, press the **ENTER** button to confirm, the current position will be displayed on the display, use the **UP/DOWN** button to adjust the initial **Pan** position (-128-127), press the **ENTER** button to save. Press the **MENU** button to exit.

Tilt

Enter the initial setup menu, select **Tilt**, press the **ENTER** button to confirm, the current position will be displayed on the display, use the **UP/DOWN** button to adjust the **Tilt** initial position (-128-127), press the **ENTER** button to save. Press the **MENU** button to exit.

Color

Enter the initial settings menu, select **Color Wheel**, press the **ENTER** button to confirm, the current position will be displayed on the display, use the **UP/DOWN** button to adjust the initial position of the **color wheel** (-128-127), press the **ENTER** button to save. Press the MENU button to exit.

Gobo

Enter the initial setting menu, select **Gobo**, press the **ENTER** button to confirm, the current position will be displayed on the display, use the **UP/DOWN** button to adjust the initial position of the gobo (-128-127), press the **ENTER** button to save. Press the **MENU** button to exit.

Gobo 2

Enter the initial setup menu, select **Gobos 2**, press the **ENTER** button to confirm, the current position will be displayed on the display, use the **UP/DOWN** button to adjust the initial position of **Gobos 2** (-128-127), press the **ENTER** button to save. Press the MENU button to exit.

Pattern rotation 2

Enter the initial setup menu, select **Pattern Rotation 2**, press the **ENTER** button to confirm, the current position will be displayed on the display, Use the **UP/DOWN** button to adjust the **Pattern Rotation 2** initial position (-128-127), press **ENTER** button to save. Press the **MENU** button to exit.

Prism 1

Enter the initial setup menu, select **Prism 1**, press the **ENTER** button to confirm, the current position will be displayed on the display, use the **UP/DOWN** button to adjust the initial position of **Prism 1** (-128-127), press the **ENTER** button to save. Press the **MENU** button to exit.

Prism Rotation 1

Enter the initial settings menu, select **Prism Rotation 1**, press the **ENTER** button to confirm, the current position will be displayed on the display, Use the **UP/DOWN** button to adjust the **Prism Rotation 1** Initial position (-128-127), press **ENTER** button to save. Press the **MENU** button to exit.

Prism 2

Enter the initial setup menu, select **Prism 2**, press the **ENTER** button to confirm, the current position will be displayed on the display, use the **UP/DOWN** button to adjust the initial position of **Prism 2** (-128-127), press the **ENTER** button to save. Press the **MENU** button to exit.

Prism Rotation 2

Enter the initial setup menu, select **Prism Rotation 2**, press the **ENTER** button to confirm, the current position will be displayed on the display, use the **UP/DOWN** button to adjust the **Prism Rotation 2** initial position (-128-127), press the **ENTER** button to save. Press the **MENU** button to exit.

Flash

Enter the initial setting menu, select **Flash**, press the **ENTER** button to confirm, the current position will be displayed on the display, use the **UP/DOWN** button to adjust the initial position of the **flash** (000-255), press the **ENTER** button to save. Press the **MENU** button to exit.

Zoom

Enter the initial settings menu, select **Zoom**, press the **ENTER** button to confirm, the current position will be displayed on the display, use the **UP/DOWN** button to adjust the initial zoom position (-128-127), press the **ENTER** button to save. Press the **MENU** button to exit.

Focus

Enter the initial settings menu, select **Focus**, press the **ENTER** button to confirm, the current position will be displayed on the display, use the **UP/DOWN** button to adjust the initial **focus** position (-128-127), press the **ENTER** button to save. Press the **MENU** button to exit.

Fogging mirrors

Enter the initial setting menu, select the **fog mirror**, press the **ENTER** button to confirm, the current position will be displayed on the display, use the **UP/DOWN** button to adjust the initial position of the **fog mirror** (-128-127), press the **ENTER** button to save. Press the **MENU** button to exit.

6. Universal DMX controller control

6.1 DMX512 connection

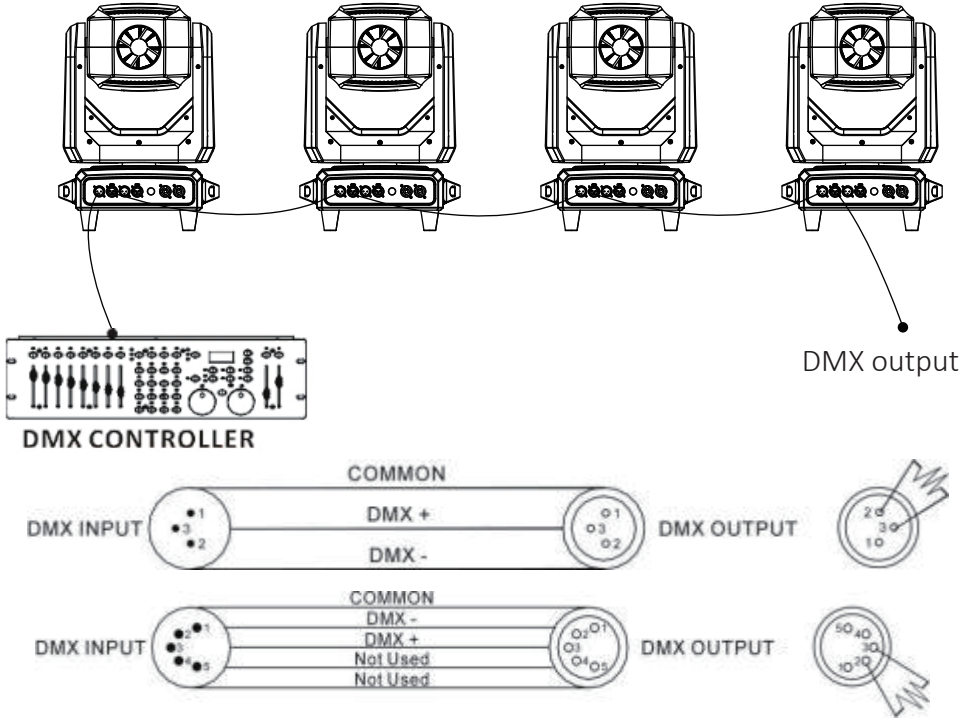

1. In order to reduce signal errors and avoid signal degradation and interference during transmission, a 120OHM1/4W can be added between the 2 and 3 pins of the DMX output of the last machine.

2. Connect the luminaire with an XLR signal cable, one end to the output port of the luminaire and the other end to the input port of the next luminaire. XLR signal cables can only be used in series, not in parallel. The DMX52 signal cable transmission speed is very fast, the signal line is damaged, the weld is not strong, the contact is not good, etc., will affect the signal transmission, causing the system to shut down.

3. When the machine power supply of a unit is disconnected, the connection between the DMX output and the input is bypassed in order to maintain the DMX line connection.

4. Each lamp needs an address code to be able to receive information from the console, ranging from 1-512 (usually 0&1 and 1 are equal).

5. The terminal of the system needs to be equipped with a terminal to reduce signal transmission errors.

6. 3-pin XLR connector connectors are more common than 5-pin XLR.

3-pin XLR: PIN 1: GND, PIN 2: Negative, PIN 3: Positive.

5-core XLR: PIN 1: GND, PIN 2: Negative, PIN 3: Positive, PIN4/PIN5: Unused.

6.2 Address code settings

When using a universal DMX controller to control a fixture, you need to set the starting address (1-512) for the fixture so that the fixture can receive the signal.
Press the MENU button to enter the menu mode, select the DMX function, press the ENTER button to confirm, select the DMX address, press the ENTER button to confirm, the current a ddress will be displayed on the display, then use the UP/DOWN button to select the address code (1-512), press the ENTER button to save. Press the MENU button to return to the previous menu or wait for 1 minute to automatically exit the menu mode.
Please refer to the chart below to set the address code of the first 4 fixtures:

Channel mode	Lamp 1 Address code	Lamp 2 Address code	Lamp 3 Address code	Lamp 4 Address code
17 passage	1	18	35	52
21 passage	1	22	43	64

6.3 DMX512 channel

Please refer to the channel diagram below to control the fixture

Note:

1. If the DMX signal is cut off, the luminaire will remain in the same state as before the signal was disconnected unless it is set again.
2. In the "Functions" channel, hold the channel value for about 3 seconds and the fixture will run the corresponding function.

17 Channel mode

CHANNEL	DMX VALUE	FUNCITON
1	000-255	Pan 0°→ 540°
2	000-255	Tilt 0°→ 270°
3	000-255	**PAN/TILT SPEED** Fast to Slow
4	000-069 070-079 080-089 090-099 100-109 110-119 120-129 130-139 140-149 150-199 200-209 210-219 220-229 230-255	**SPECIAL FEATURES** not The XY axis movement avoidance function is enabled The XY axis is incapacitated to move and avoid light The color wheel is moved and protected from light The color wheel moves to avoid light Gobo wheel movement is enabled to protect from light Gobo disc moves to avoid light Fast dimming speed The dimming speed is smooth not The whole machine is reset XY axis reset Head motor reset not
5	000-019 020-049 050-200 201-210 211-250 251-255	**Strobe** Strobe off Strobe on Strobe (slow to fast) Strobe on Random strobe (slow to fast) Strobe open
6	000-255	Dimming 0% →100%
7	000-015 016-018 019-021 022-024 025-027 028-030 031-033	**Color wheel** white light White light/color 1 Color 1 Color 1 / Color 2 Color 2 Color 2 / Color 3 Color 3

	034-036	Color 3 / Color 4
	037-039	Color 4
	040-042	Color 4 / Color 5
	043-045	Color 5
	046-048	Color 5 / Color 6
	049-051	Color 6
	052-054	Color 6 / Color 7
	055-057	Color 7
	058-060	Color 7 / Color 8
	061-063	Color 8
	064-190	Rotate clockwise (fast to slow)
	191-193	Stop it
	194-255	Rotate counterclockwise (from slow to fast.)
8		**Rotate the gobo**
	000-007	Transparent aperture
	008-015	Pattern 1
	016-023	Pattern 2
	024-031	Pattern 3
	032-039	Pattern 4
	040-047	Pattern 5
	048-055	Pattern 6
	056-063	Pattern 7
	064-071	Pattern 1: Jitter is slow to fast
	072-079	Pattern 2: Jitter is slow to fast
	080-087	Pattern 3: Jitter is slow to fast
	088-095	Pattern 4: Jitter is slow to fast
	096-103	Pattern 5: Jitter is slow to fast
	104-111	Pattern 6 jitter is slow to fast
	112-127	Pattern 7 jitter is slow to fast
	128-190	Rotate clockwise (fast to slow)
	191-192	Stop it
	193-255	Rotate counterclockwise (slow to fast)
9		**Rotate the gobo wheel to rotate**
	000-127	Position (0°-360°)
	128-189	Rotate clockwise (fast to slow)
	190-193	Stop it
	194-255	Rotate counterclockwise (slow to fast)
		Fixed gobos
	000-011	Transparent aperture
	012-017	Pattern 1
	018-023	Pattern 2

10	024-029 030-035 036-047 048-055 056-063 064-071 072-074 076-087 081-095 086-103 091-111 096-127 101-127 106-127 111-127 116-127 128-190 191-192 193-255	Pattern 3 Pattern 4 Pattern 5 Pattern 6 Pattern 7 Pattern 8 Figure 9 Pattern 1: Jitter is slow to fast Pattern 2: Jitter is slow to fast Pattern 3: Jitter is slow to fast Pattern 4: Jitter is slow to fast Pattern 5: Jitter is slow to fast Pattern 6 jitter is slow to fast Pattern 7 jitter is slow to fast Pattern 8 jitter is slow to fast Pattern 9 jitters slowly to quickly Rotate clockwise (fast to slow) Stop it Rotate counterclockwise (slow to fast)
11		**Prism 1**
	000-007 008-255	Non-functional Prism 1 opens
12		**Prism 1 rotation**
	000-127 128-189 190-193 194-255	Prism 1 position (0°-360°) Rotate clockwise (fast to slow) Stop it Rotate counterclockwise (slow to fast)
13	000-255	Focus
14	000-255	Zoom
15	000-255	Light ring dimming
16		**Light ring effect**
	000-119 120-125 126-131 132-137 138-143 144-149 150-155 156-161 162-167	Static macro color of the light ring Dynamic effect of the light ring 1 Dynamic effect of the light ring 2 Dynamic effect of light ring 3 Dynamic effect of light ring 4 Dynamic effect of light ring 5 Dynamic effect of light ring 6 Dynamic effect of light ring 7 Dynamic effect of light ring 8

	168-173 174-179 180-185 186-191 192-197 198-203 204-209 210-215 216-221 222-227 228-233 234-239 240-245 246-247 248-249 250-251 252-253 254-255	Dynamic effect of light ring 9 Light ring dynamic effect 10 Dynamic effect of light ring 11 Dynamic effect of light ring 12 Dynamic effect of light ring 13 Dynamic effect of light ring 14 Dynamic effect of light ring 15 Dynamic effect of light ring 16 Dynamic effect of the light ring 17 Dynamic effect of light ring 18 Dynamic effect of light ring 19 Dynamic effect of light ring 20 Dynamic effect of light ring 21 Dynamic random color effect of the light ring 1 Dynamic random color effect of the light ring 2 Dynamic random color effect of the light ring3 Dynamic random color effect of the light ring 4 Dynamic effect of light ring 22
17	000-255	The light ring effect speed is slow to fast

21 Channel mode

CHANNEL	DMX VALUE	FUNCITON
1	000-255	Pan 0°→ 540°
2	000-255	Pan Fine
3	000-255	Tilt 0°→ 270°
4	000-255	Tilt Fine
5	000-255	**PAN/TILT SPEED** Fast to Slow
6	000-069 070-079 080-089 090-099 100-109 110-119 120-129 130-139	**SPECIAL FEATURES** not The XY axis movement avoidance function is enabled The XY axis is incapacitated to move and avoid light The color wheel is moved and protected from light The color wheel moves to avoid light Gobo wheel movement is enabled to protect from light Gobo disc moves to avoid light Fast dimming speed

	140-149 150-199 200-209 210-219 220-229 230-255	The dimming speed is smooth not The whole machine is reset XY axis reset Head motor reset not
7		**Strobe**
	000-019	Strobe off
	020-049	Strobe on
	050-200	Strobe (slow to fast)
	201-210	Strobe on
	211-250	Random strobe (slow to fast)
	251-255	Strobe open
8	000-255	Dimming 0% →100%
9		**Color wheel**
	000-015	white light
	016-018	White light/color 1
	019-021	Color 1
	022-024	Color 1 / Color 2
	025-027	Color 2
	028-030	Color 2 / Color 3
	031-033	Color 3
	034-036	Color 3 / Color 4
	037-039	Color 4
	040-042	Color 4 / Color 5
	043-045	Color 5
	046-048	Color 5 / Color 6
	049-051	Color 6
	052-054	Color 6 / Color 7
	055-057	Color 7
	058-060	Color 7 / Color 8
	061-063	Color 8
	064-190	Rotate clockwise (fast to slow)
	191-193	Stop it
	194-255	Rotate counterclockwise (from slow to fast.)
10		**Rotate the gobo**
	000-007	Transparent aperture
	008-015	Pattern 1
	016-023	Pattern 2
	024-031	Pattern 3
	032-039	Pattern 4

	040-047	Pattern 5
	048-055	Pattern 6
	056-063	Pattern 7
	064-071	Pattern 1: Jitter is slow to fast
	072-079	Pattern 2: Jitter is slow to fast
	080-087	Pattern 3: Jitter is slow to fast
	088-095	Pattern 4: Jitter is slow to fast
	096-103	Pattern 5: Jitter is slow to fast
	104-111	Pattern 6 jitter is slow to fast
	112-127	Pattern 7 jitter is slow to fast
	128-190	Rotate clockwise (fast to slow)
	191-192	Stop it
	193-255	Rotate counterclockwise (slow to fast)
11		**The rotation pattern rotates**
	000-127	Position (0°-360°)
	128-189	Rotate clockwise (fast to slow)
	190-193	Stop it
	194-255	Rotate counterclockwise (slow to fast)
12		**Fixed gobos**
	000-011	Transparent aperture
	012-017	Pattern 1
	018-023	Pattern 2
	024-029	Pattern 3
	030-035	Pattern 4
	036-047	Pattern 5
	048-055	Pattern 6
	056-063	Pattern 7
	064-071	Pattern 8
	072-074	Figure 9
	076-087	Pattern 1: Jitter is slow to fast
	081-095	Pattern 2: Jitter is slow to fast
	086-103	Pattern 3: Jitter is slow to fast
	091-111	Pattern 4: Jitter is slow to fast
	096-127	Pattern 5: Jitter is slow to fast
	110-127	Pattern 6 jitter is slow to fast
	106-127	Pattern 7 jitter is slow to fast
	111-127	Pattern 8 jitter is slow to fast
	116-127	Pattern 9 jitters slowly to quickly
	128-190	Rotate clockwise (fast to slow)
	191-192	Stop it
	193-255	Rotate counterclockwise (slow to fast)

13	000-007 008-255	**Prism 1** Non-functional Prism 1 opens
14	000-127 128-189 190-193 194-255	**Prism 1 rotation** Prism 1 position (0°-360°) Rotate clockwise (fast to slow) Stop it Rotate counterclockwise (slow to fast)
15	000-255	Focus
16	000-255	Focus Fine
17	000-255	Zoom
18	000-255	Zoom Fine
19	000-255	Light ring dimming
20	000-119 120-125 126-131 132-137 138-143 144-149 150-155 156-161 162-167 168-173 174-179 180-185 186-191 192-197 198-203 204-209 210-215 216-221 222-227 228-233 234-239 240-245 246-247 248-249 250-251 252-253 254-255	**Light ring effect** Static macro color of the light ring Dynamic effect of the light ring 1 Dynamic effect of the light ring 2 Dynamic effect of light ring 3 Dynamic effect of light ring 4 Dynamic effect of light ring 5 Dynamic effect of light ring 6 Dynamic effect of light ring 7 Dynamic effect of light ring 8 Dynamic effect of light ring 9 Light ring dynamic effect 10 Dynamic effect of light ring 11 Dynamic effect of light ring 12 Dynamic effect of light ring 13 Dynamic effect of light ring 14 Dynamic effect of light ring 15 Dynamic effect of light ring 16 Dynamic effect of the light ring 17 Dynamic effect of light ring 18 Dynamic effect of light ring 19 Dynamic effect of light ring 20 Dynamic effect of light ring 21 Dynamic random color effect of the light ring 1 Dynamic random color effect of the light ring 2 Dynamic random color effect of the light ring3 Dynamic random color effect of the light ring 4 Dynamic effect of light ring 22

21	000-255	The light ring effect speed is slow to fast

6.4 Product Lighting Diagram

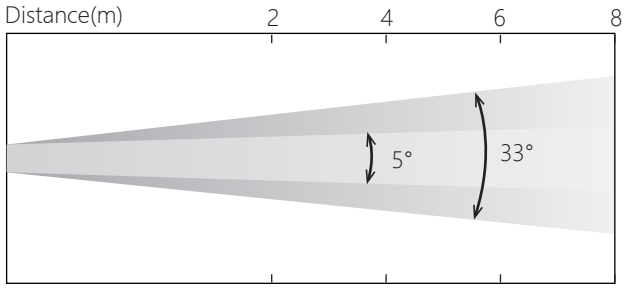

5°Lux	210000	41000	10800	4600
Diameter(m)	0.26	0.44	0.61	0.78
33°Lux	5970	3200	820	580
Diameter(m)	1.25	2.4	3.6	4.8

7. error message

When there is an abnormality in the luminaire, the error warning will continue to be displayed on the display and will not disappear until the fault will be solved.

1. CPU-B/C/D error

Check that the 485(DATA) leads on the PCB board are in place or disconnected

Check that the 485 (DATA) lead is not broken

Check the associated signal circuit 485 (DATA) on the PCB for damage

2. Horizontal reset error

Check the position of the horizontally mounted magnet for detachment or damage

Check whether there are any other interfering items within the horizontal operating range

Check the horizontal Hall element for damage

Check the horizontal Hall element to the PCB board leads for poor contact or disconnection

Check the horizontal motor for damage

Check whether the relevant circuits of the horizontal motor drive board are damaged

3. Horizontal encoder error

Check the horizontal encoder for damage

Check the horizontal encoder-to-PCB board leads for poor contact or disconnection

4. Vertical reset error

Check whether the vertically mounted magnet position is detached or damaged

Check the vertical operating range for other interfering items

Inspect the vertical Hall element for damage

Check that the vertical Hall element to the PCB board leads are not in poor contact or disconnected

Check the vertical motor for damage

Check whether the circuits related to the vertical motor drive board are damaged

5. Vertical encoder error

Check if the vertical encoder is damaged

Check that the vertical encoder-to-PCB board leads are not in poor contact or disconnected

6. Strobe resetting error

Check whether the position of the strobe mounting magnet is detached or damaged

Check whether there are other interfering items in the operating range of the strobe blade

Inspect the strobe hall components for damage

Check whether the strobe hall components are in poor contact or disconnected with the PCB leads

Check the strobe motor for damage

Check whether the relevant circuits of the strobe motor driver board are damaged

7. Color disc reset error

Check whether the color disc mounting magnet position is off or damaged

Check whether there are any other interfering items in the operating range of the color wheel

Check the color wheel for damage to Hall components

Check the color disc Hall components to the PCB for poor contact or disconnection

Check the color disc motor for damage

Check whether the circuit related to the color disc motor driver board is damaged

8. Gobo 1/Gobo Rotation 1 reset error

Check whether the position of the mounting magnet of gobo 1 is off or damaged

Check whether there are other interfering items in the operating range of the gobo wheel 1

Check the gobo Hall component for damage

Check whether the gobo 1 Hall component to the PCB board lead is in poor contact or disconnected

Check whether the gobo 1 motor is damaged

Check whether the circuit related to the motor drive board of the gobo 1 is damaged

9. Gobo 2 reset error

Check whether the position of the gobo 2 mounting magnet is off or damaged

Check whether there are other interfering items in the operating range of the gobo 2

Check whether the Gobo 2 Hall component is damaged

Check whether the lead wires of the Gobo 2 Hall components to the PCB board are in poor contact or disconnected

Check whether the gobo 2 motor is damaged

Check whether the related circuits of the gobo 2 motor drive board are damaged

10. Prism 1/Prism 1/Rotation reset error

Check whether the position of the magnet installed in prism 1 is off or damaged

Check whether there are other interfering items in the operating range of prism 1

Check whether the prism 1 Hall component is damaged

Check whether the prism 1 Hall component to the PCB board leads are in poor contact or disconnected

Check whether the prism 1 motor is damaged

Check whether the circuit related to the prism 1 motor drive board is damaged

11. Prism 2/Prism 2 rotation reset error

Check whether the position of the magnet installed in prism 2 is off or damaged

Check whether there are other interfering items in the operating range of prism 2

Check whether the prism 2 Hall component is damaged

Check whether the prism 2 Hall component to the PCB board leads are in poor contact or disconnected

Check the prism 2 motor for damage

Check whether the circuit related to the prism 2 motor driver board is damaged

12. Focus reset error

Check whether the focus mounting magnet position is off or damaged

Check whether there are other interfering items in the focusing operating range

Check the gobo Hall component for damage

Check whether the gobo 1 Hall component to the PCB board lead is in poor contact or disconnected

Check whether the gobo 1 motor is damaged

Check whether the circuit related to the motor drive board of the gobo 1 is damaged

13. Zoom reset error

Check the location of the zoom mounting magnet for detachment or damage

Check if there are any other interfering items in the zoom range

Check for damage to the scaled Hall component

Check that the scaled Hall component to the PCB board leads are not in poor contact or disconnected

Check if the scaling motor is damaged

Check whether the circuits related to the scaling motor driver board are damaged

14. Lamp bead fan 1/2/3 error

Check if the fan is not running or if the fan voltage is measured correctly

Check that the fan leads are installed or disconnected

Check whether the fan circuit on the PCB board is abnormal

15. Head fan 1/2/3 error

Check if the fan is not running or if the fan voltage is measured correctly

Check that the fan leads are installed or disconnected

Check whether the fan circuit on the PCB board is abnormal

16. Head fan 1/2/3 error

Check if the fan is not running or if the fan voltage is measured correctly

Check that the fan leads are installed or disconnected

Check whether the fan circuit on the PCB board is abnormal

17. Head temperature detection error

Check whether the temperature detection plate is normal

Check whether the components of the temperature detection board are damaged

Check that the temperature detection board leads are not disconnected

8. Troubleshooting

Here are some of the problems that often occur when the equipment is in operation, with some suggestions for troubleshooting:

A. The light fixtures are not working, there are no lights, and the fans are not turning

1. Check the power contact and the fuse is in good condition.
2. Detect voltage.
3. Check the indicator light of the power switch.

B. Not controlled by the console

1. Check that the DMX signal connector and signal cable are connected correctly.
2. Check if the address code is set correctly.
3. If the DMX signal transmission is intermittent, check that the XLR is well connected to the signal cable.
4. Try it with a different controller.
5. Check that the DMX signal line and the high-voltage wire are too close together, which could damage or interfere with the signal circuit.

C. A channel is out of order

1. The stepper motor or motor leads may be damaged.
2. The drive circuit of the motor may be damaged.

D. Light bulbs are sometimes good and bad

1. The bulb does not light properly. See if the voltage is too high or too low.
2. The internal temperature may be too high. If necessary, replace the refrigeration fan.

9. Equipment cleaning

Keeping the luminaires clean is absolutely essential in order to maintain optimal performance and ensure the best possible lighting results. Luminaires must be cleaned regularly to avoid accumulation of dust, dirt and smoke residues on the surface or inside the luminaire, depending on the environment in which the application is applied. If dust enters the lamp due to the installation and construction environment, please clean it immediately to avoid excessive dust Cause damage to the optical part of the lamp.

* It is recommended to use a soft, lint-free cloth and a high-quality glass cleaning solution, and no solvents should be used under any circumstances.
* Carefully wipe the parts.
* The outside of the lens must be wiped at least every 20 days. Wipe the inside at least every 30 days.